Tact Switch Series

TS4401 4.80 x 4.80mm Tact Switch Series

ELECTRICAL

1.Rating: 20mA 12VDC
2.Contact Resistance : 50mΩ Max.
3.Insulation Resistance: 100MΩ Min.
4.Dielectric Strength : AC250V(50/60Hz for 1minute)
5.Electrically Life: 100, 000cycles
6.Environment temperature:-25ºC~+70ºC
7.Operating Force: 120/150±10gf
8.Seal temperature:260ºC~ 280ºC

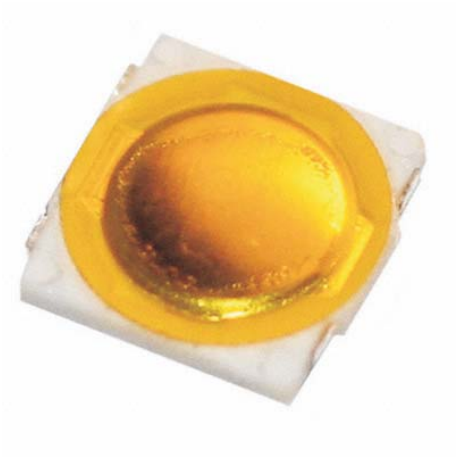

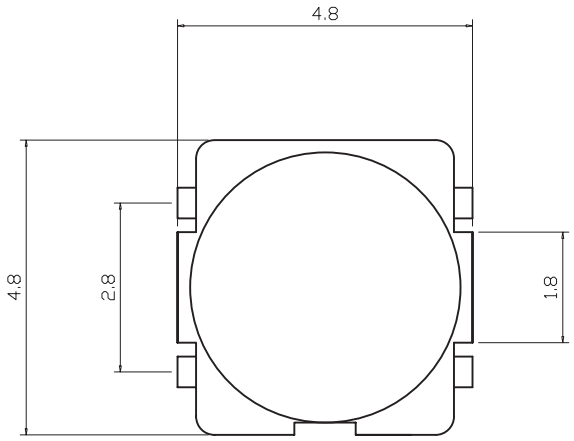

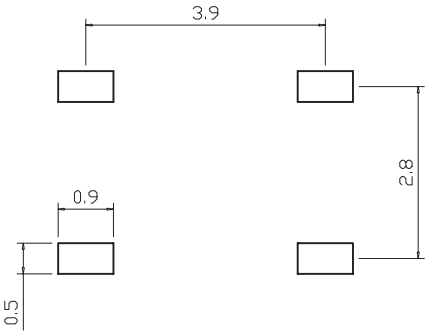

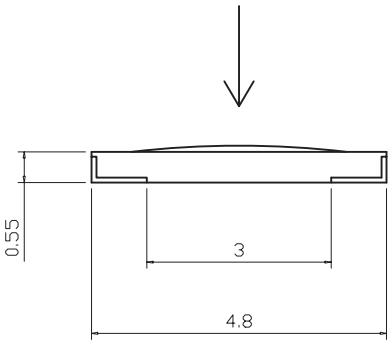

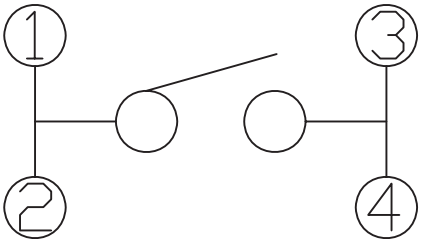

ORDER INFORMATION

TS4401 - 120 -B

Part Number

Packing: B-Bulk T-Tape

Operating Force :120±10gf or 150±10gf